floorsight

Power Puck Installation Guide

Parts included:

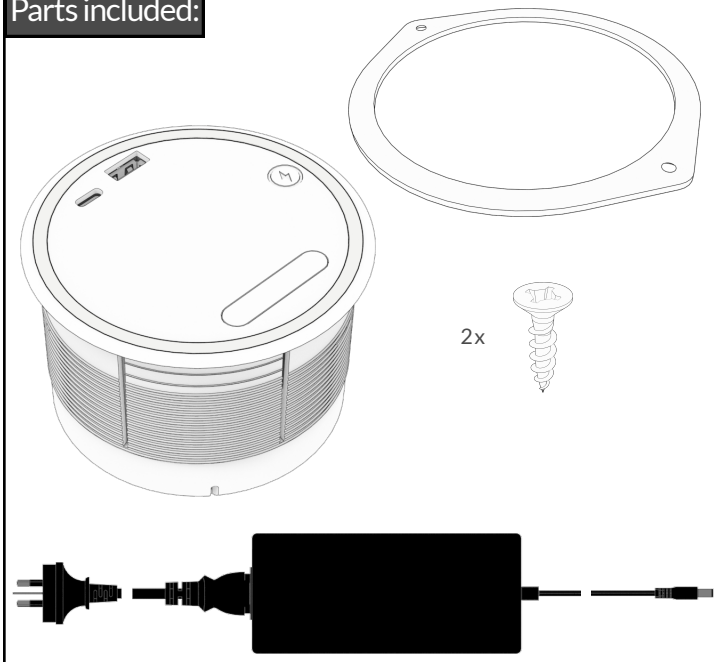

1x Floorsight Power Puck, 1x Retention Ring (optional), 1x Power Supply

Ensure underside of desk is clear before drilling through.

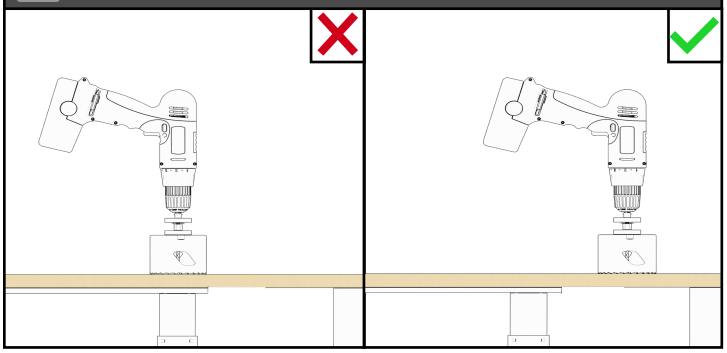

1

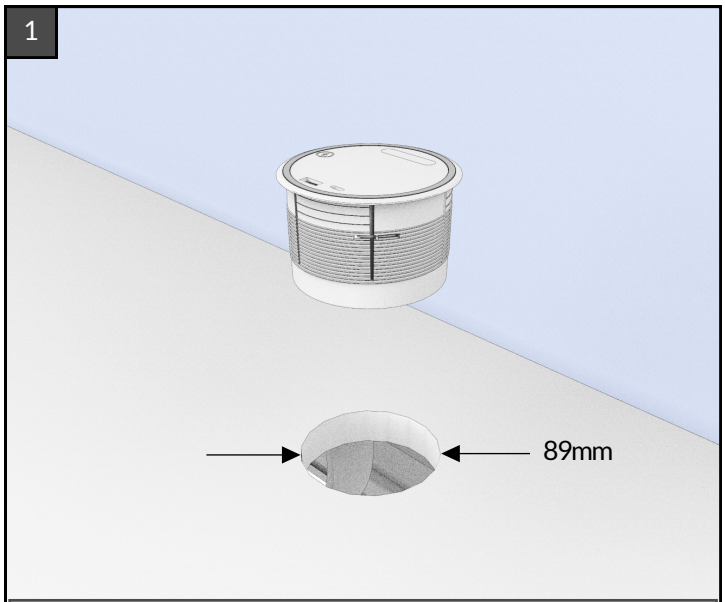

If the desk does not have a pre-drilled hole then you will need to do this with a 3.5 inch holesaw. Press the floorsight module firmly into the hole.

2*

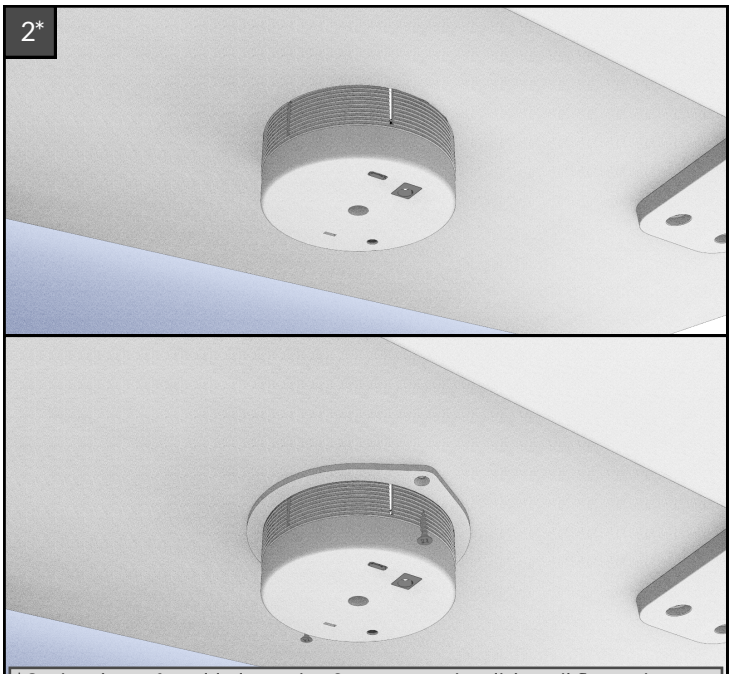

*Optional step for added security. Screw mounting disk until flat against underside of table. Insert wood screws to fix in place

3

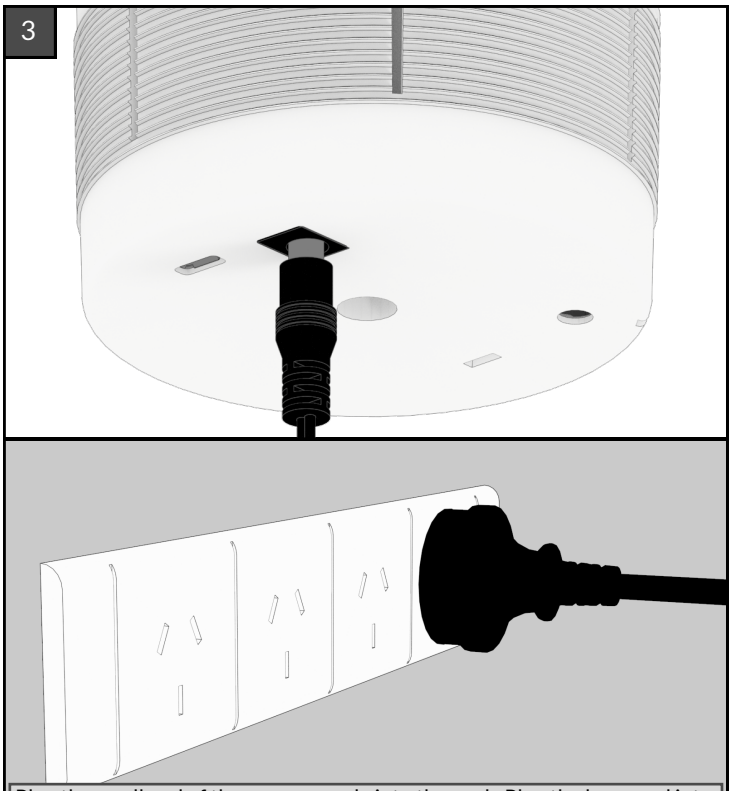

Plug the small end of the power supply into the puck. Plug the large end into AC power supplied to the desk.
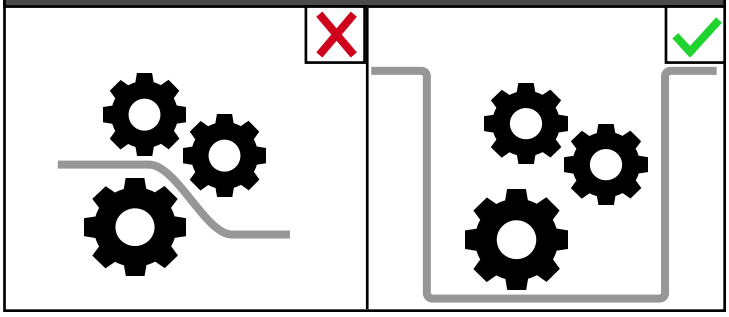
Avoid moving parts of adjustable height desks